**Model No.** **T67DBB - 038 - B10 - B10 - 1 R 00 - A 1 - M1 -**

**Series - SAE C 2 bolts Mounting flange J744c**

**Cam ring for "P1"** (Delivery at 0 bar & 1500 RPM)
014 = 71,4 l/min
020 = 99,0 l/min
024 = 119,3 l/min
028 = 134,5 l/min
031 = 147,4 l/min
035 = 166,5 l/min
038 = 180,4 l/min
042 = 204,0 l/min
045 = 218,5 l/min
050 = 237,0 l/min

**Cam ring for "P2" & "P3"** (Delivery at 0 bar & 1500 RPM)
B02 = 8,7 l/min
B03 = 14,7 l/min
B04 = 19,2 l/min
B05 = 23,8 l/min
B06 = 29,7 l/min
B07 = 33,7 l/min
B08 = 37,4 l/min
B10 = 47,7 l/min
B12 = 61,5 l/min
B15 = 75,0 l/min

**Modifications**

**Mounting w/connection variables**
01 = 4 bolts SAE flanges (J518c) UNC thread
M1 = 4 bolts SAE flanges (J518c) Metric thread

**Seal class**
1 = S1 (for mineral oil)
4 = S4 (for fire resistant fluids)
5 = S5 (for mineral oil and fire resistant fluids)

**Design letter**

**Porting combination (see pages 30 & 31)**
00 = standard

**Direction of rotation (view on shaft end)**
R = clockwise
L = counter-clockwise

**Type of shaft**
1 = keyed (non SAE)
2 = keyed (SAE CC)
3 = splined (SAE C)
4 = splined (SAE CC)

## OPERATING CHARACTERISTICS - TYPICAL [24 CSt]

| Pressure port | Series | Volumetric displacem. Vi | Flow $q_v$ [l/min] & n = 1500 RPM | | | Input power P [kW] & n = 1500 RPM | | |
|---|---|---|---|---|---|---|---|---|
| | | | p = 0 bar | p = 140 bar | p = 240 bar | p = 7 bar | p = 140 bar | p = 240 bar |
| P1 | 014 | 47,6 ml/rev | 71,4 | 62,1 | 55,9 | 2,3 | 18,5 | 30,6 |
| | 020 | 66,0 ml/rev | 99,0 | 89,7 | 83,5 | 2,8 | 24,9 | 41,7 |
| | 024 | 79,5 ml/rev | 119,3 | 110,0 | 103,8 | 3,0 | 29,6 | 49,8 |
| | 028 | 89,7 ml/rev | 134,5 | 125,2 | 119,0 | 3,2 | 33,2 | 55,9 |
| | 031 | 98,3 ml/rev | 147,4 | 138,1 | 131,9 | 3,3 | 36,2 | 61,0 |
| | 035 | 111,0 ml/rev | 166,5 | 157,2 | 151,0 | 3,5 | 40,7 | 68,7 |
| | 038 | 120,3 ml/rev | 180,4 | 171,1 | 164,9 | 3,7 | 43,9 | 74,3 |
| | 042* | 136,0 ml/rev | 204,0 | 194,7 | 188,5 | 4,0 | 49,4 | 83,7 |
| | 045* | 145,7 ml/rev | 218,5 | 209,2 | 203,0 | 4,1 | 52,8 | 89,5 |
| | 050* | 158,0 ml/rev | 237,0 | 227,7 | 224,0** | 4,4 | 57,0 | 85,0** |
| | | | **p = 0 bar** | **p = 140 bar** | **p = 300 bar** | **p = 7 bar** | **p = 140 bar** | **p = 300 bar** |
| P2 & P3 | B02 | 5,8 ml/rev | 8,7 | 7,0 | 5,1 | 0,5 | 2,6 | 5,1 |
| | B03 | 9,8 ml/rev | 14,7 | 13,0 | 11,1 | 0,6 | 4,0 | 8,1 |
| | B04 | 12,8 ml/rev | 19,2 | 17,5 | 15,6 | 0,6 | 5,0 | 10,4 |
| | B05 | 15,9 ml/rev | 23,9 | 22,2 | 20,2 | 0,7 | 6,1 | 12,7 |
| | B06 | 19,8 ml/rev | 29,7 | 28,0 | 26,1 | 0,7 | 7,5 | 15,6 |
| | B07 | 22,5 ml/rev | 33,7 | 32,0 | 30,2 | 0,8 | 8,5 | 17,6 |
| | B08 | 24,9 ml/rev | 37,4 | 35,7 | 33,7 | 0,8 | 9,3 | 19,5 |
| | B10 | 31,8 ml/rev | 47,7 | 46,0 | 44,1 | 0,9 | 11,7 | 24,6 |
| | B12 | 41,0 ml/rev | 61,5 | 59,8 | 57,9 | 1,1 | 14,9 | 31,5 |
| | B15 | 50,0 ml/rev | 75,0 | 73,3 | 71,6*** | 1,3 | 18,1 | 35,7*** |

** 042 - 045 - 050 = 2200 RPM max. ** 050 = 210 bar max. int. *** B15 = 280 bar max. int.*

## INTERNAL LEAKAGE (TYPICAL)

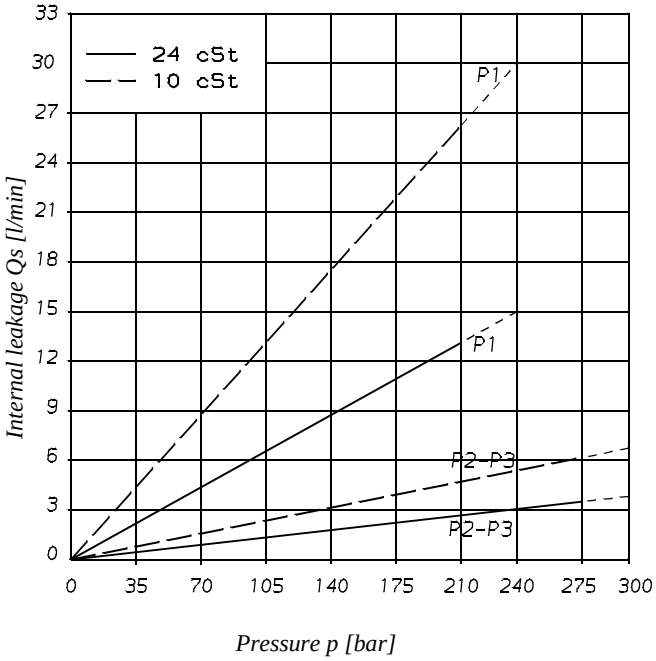


*Do not operate pump more than 5 seconds at any speed or viscosity if internal leakage is higher than 50% of theoretical flow. Total leakage is the sum of each section loss at its operating conditions.*

## NOISE LEVEL (TYPICAL)

**T67DBB - 038 - B06 - B04**

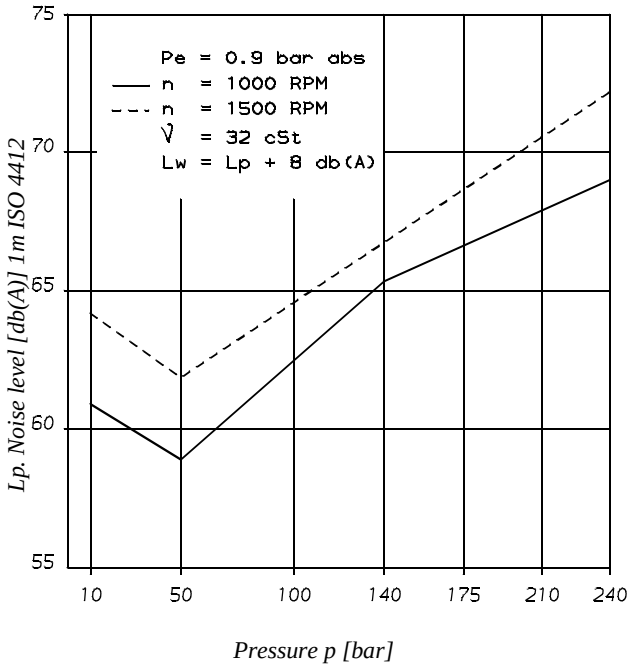


*Triple pump noise level is given with each section discharging at the pressure noted on the curve.*

## POWER LOSS HYDROMECHANICAL (TYPICAL)

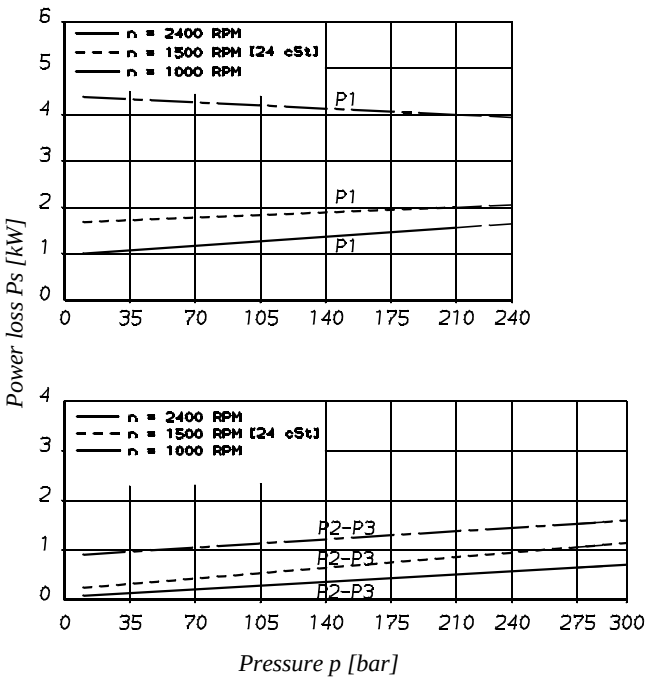


*Total hydromechanical power loss is the sum of each section at its operating conditions.*

## PERMISSIBLE RADIAL LOAD

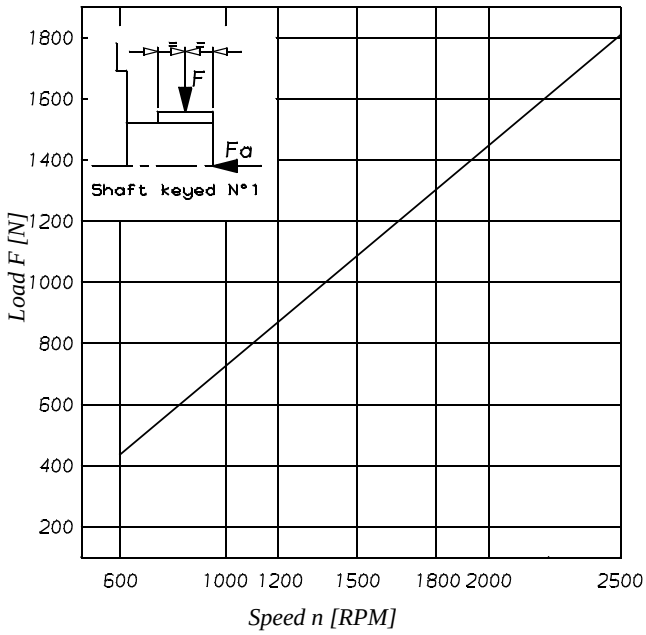


*Maximum permissible axial load Fa = 1200 N*

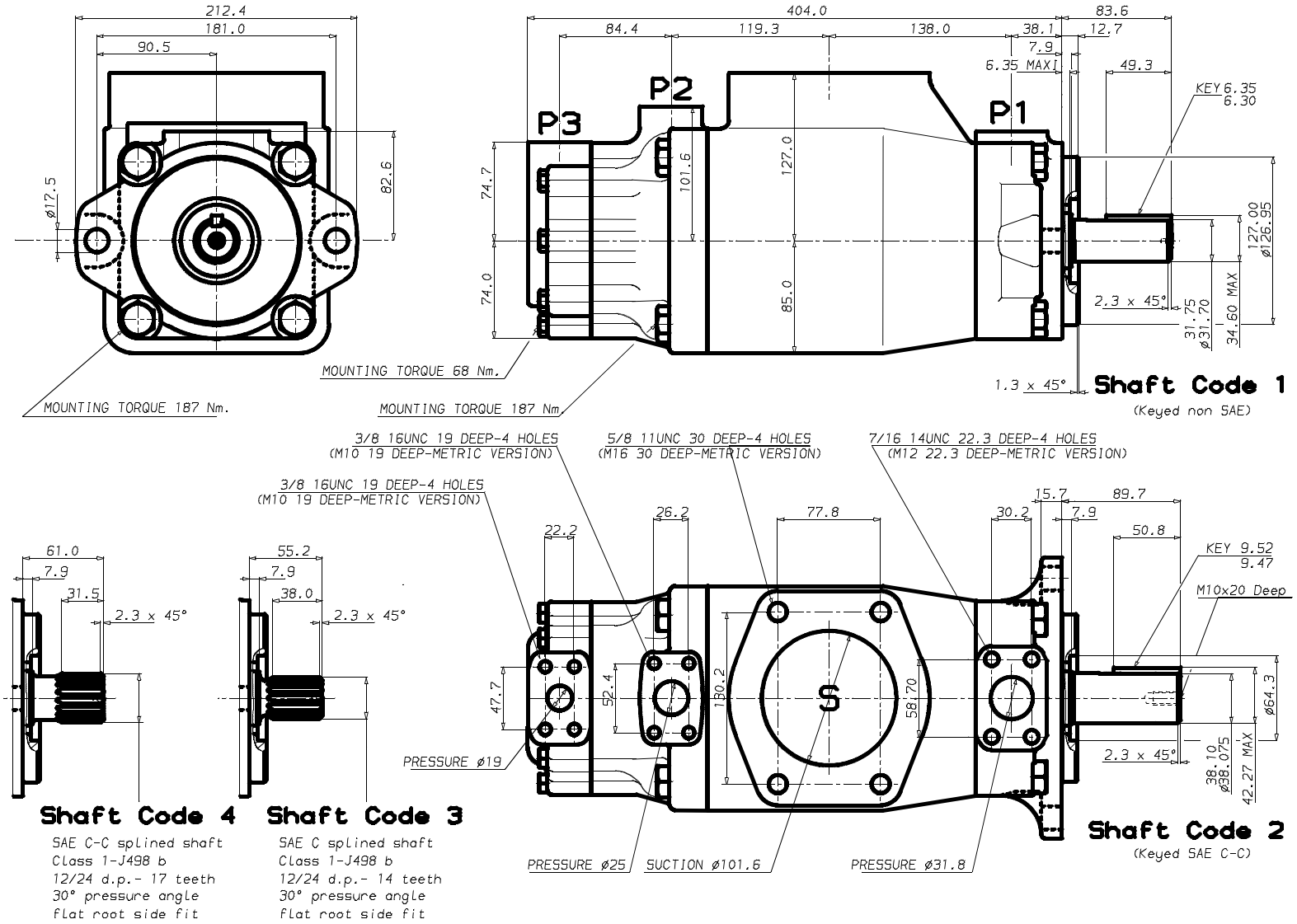


| Shaft torque limits [ml/rev x bar] | | | | |
|---|---|---|---|---|
| Pump | Shaft | Vi x p max. P1 + P2 + P3 | Shaft | Vi x p max. P1 + P2 + P3 |
| T67DBB<br>T67DCB | 1 | 43240 | 3 | 61200 |
| | 2 | 66500 | 4 | 66500 |